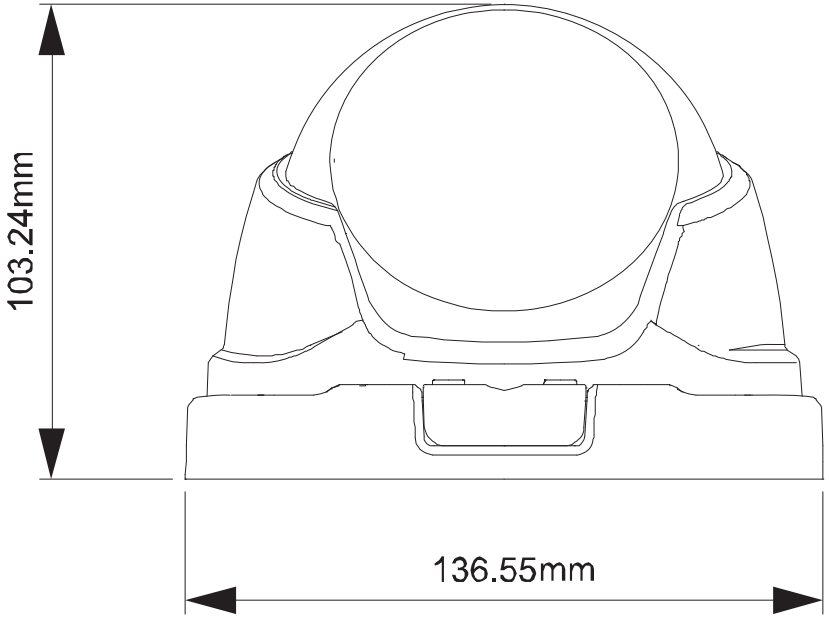
103.24mm
136.55mm

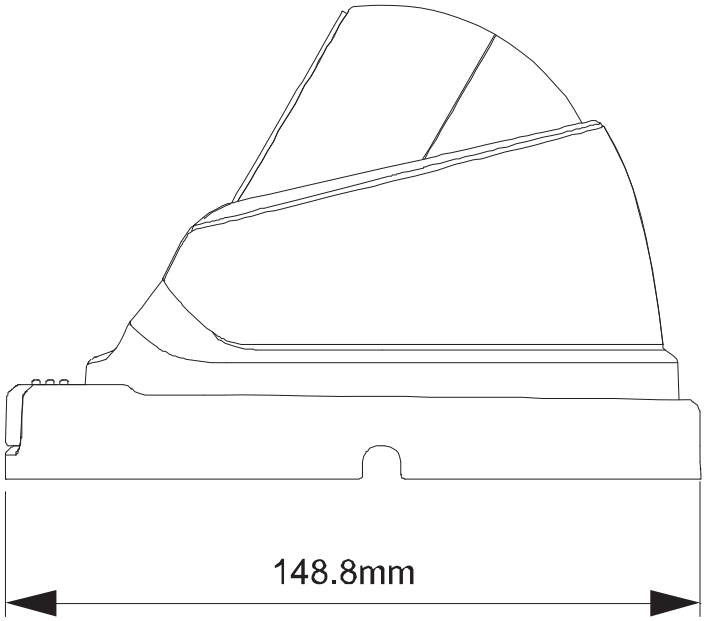
148.8mm